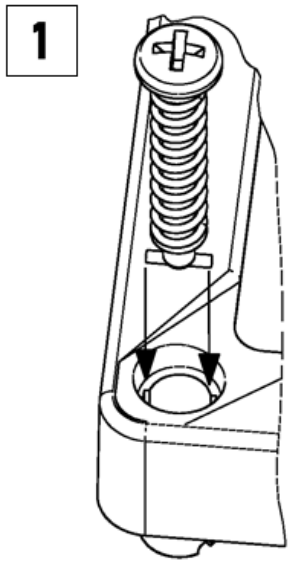

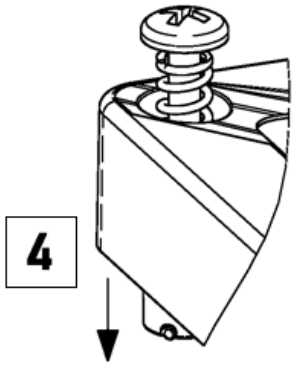

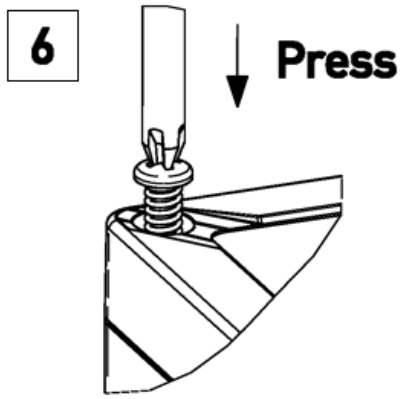

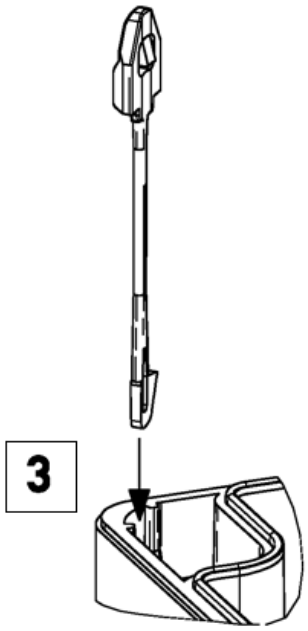

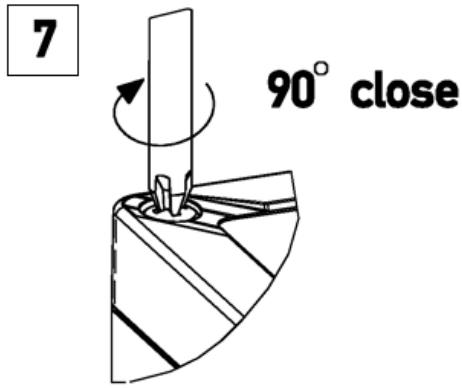

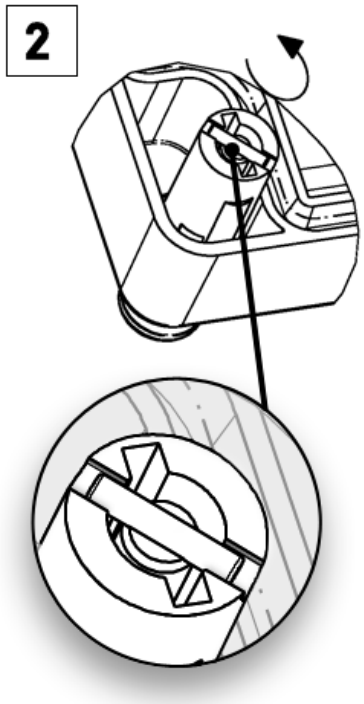

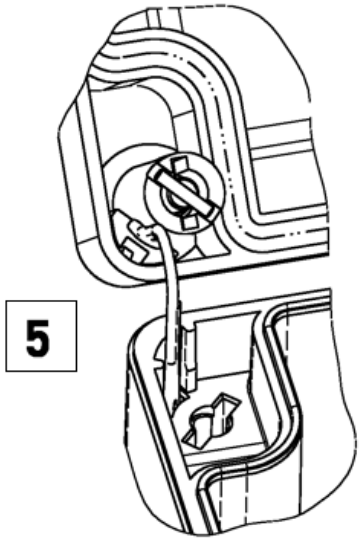

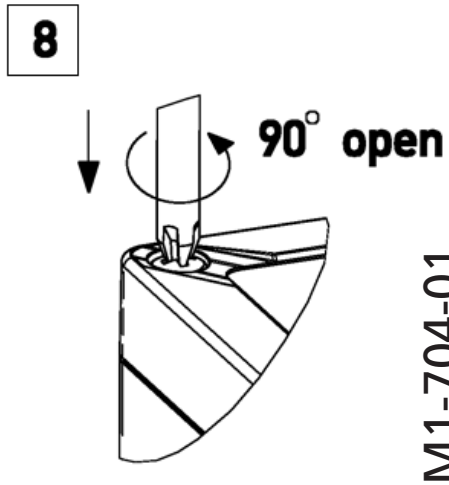

M1-704-01